# Conversión CC/CC

Half-bridge
Ejemplo de aplicación

# Convertidor Half-bridge

Hemos visto el convertidor puente completo:

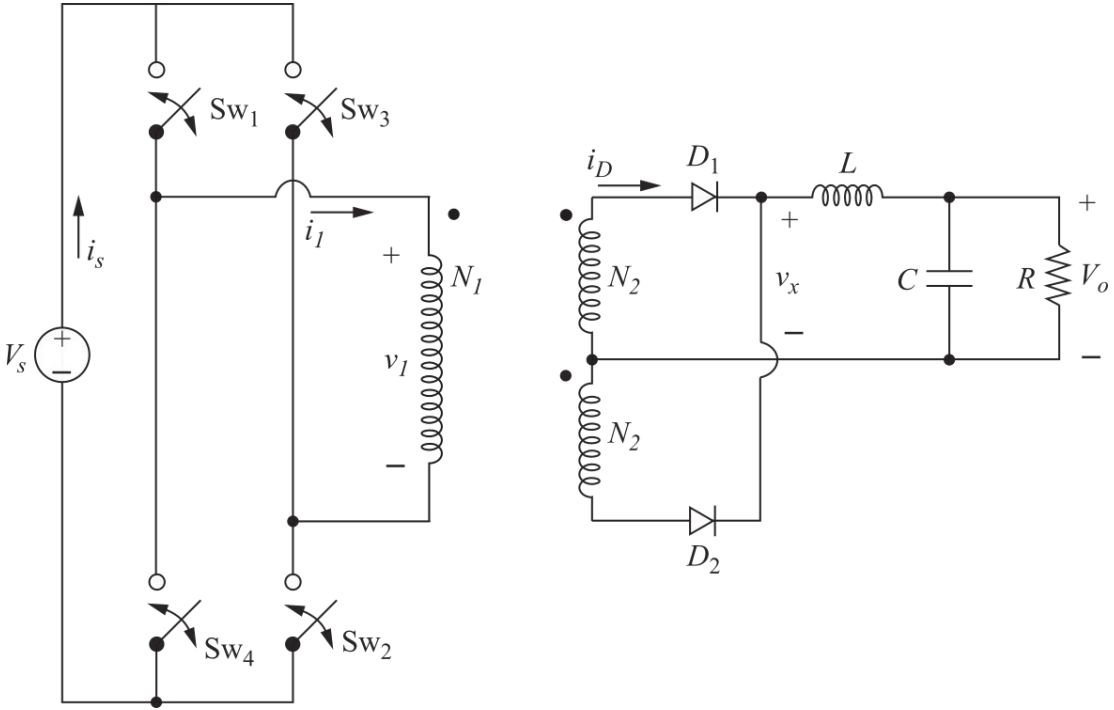

# Convertidor Half-bridge

El convertidor Half-bridge utiliza sólo dos llaves. Requiere el punto medio de $V_s$

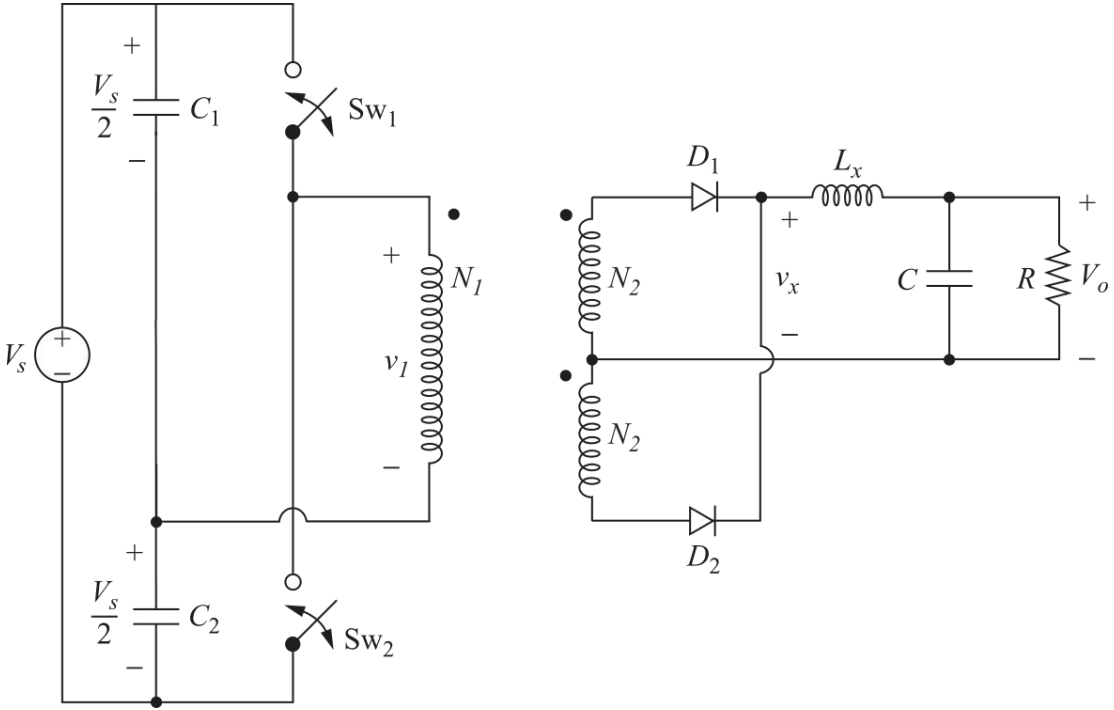

# Convertidor Half-bridge

El convertidor Half-bridge utiliza sólo dos llaves. Requiere el punto medio de $V_s$

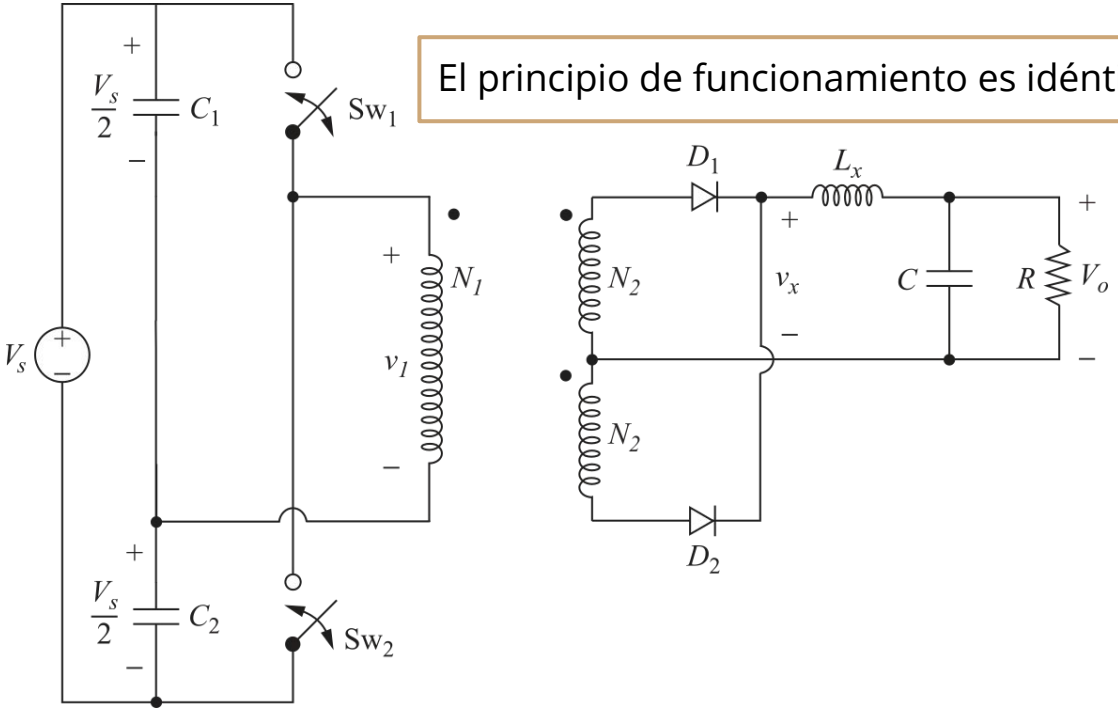


El principio de funcionamiento es idéntico al Full-bridge

# Convertidor Half-bridge

El convertidor Half-bridge utiliza sólo dos llaves. Requiere el punto medio de $V_s$

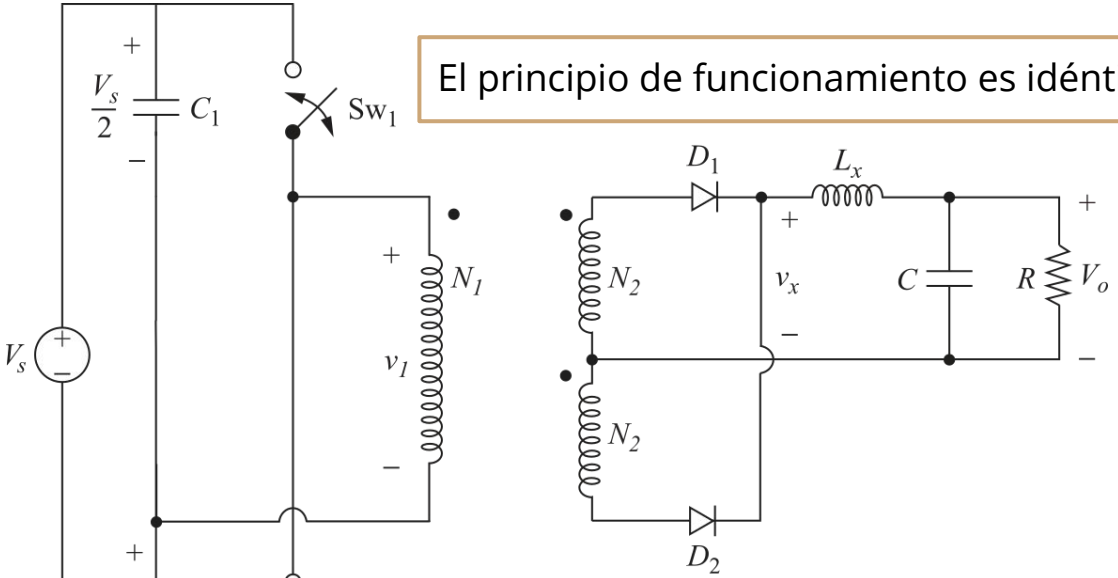


El principio de funcionamiento es idéntico al Full-bridge

→ En $v_1$ habrá la mitad de tensión ($\pm V_s/2$).

→ La relación de conversión entonces será $V_0 = N_2/N_1 \cdot D \cdot V_s$

# Ejemplo: Fuente de PC

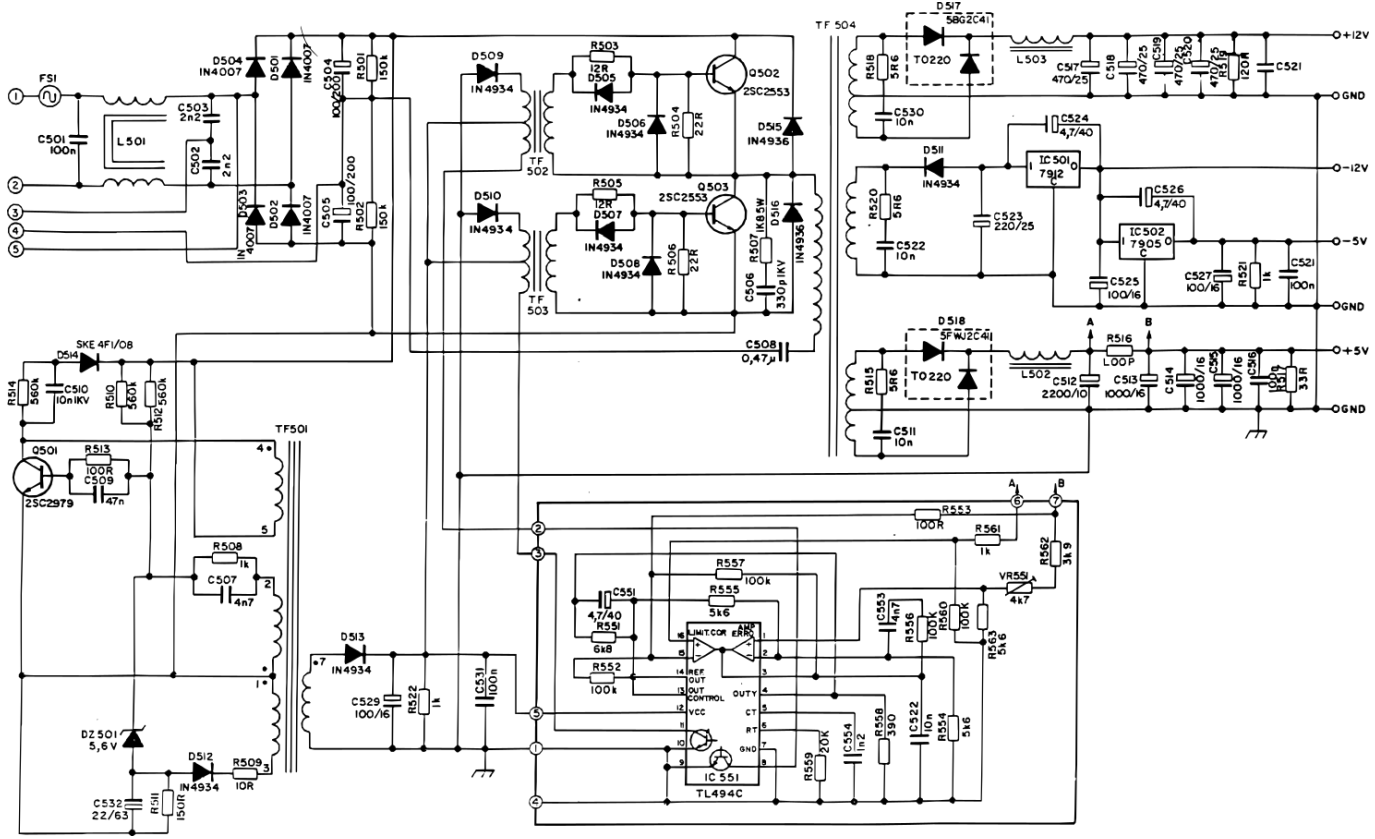

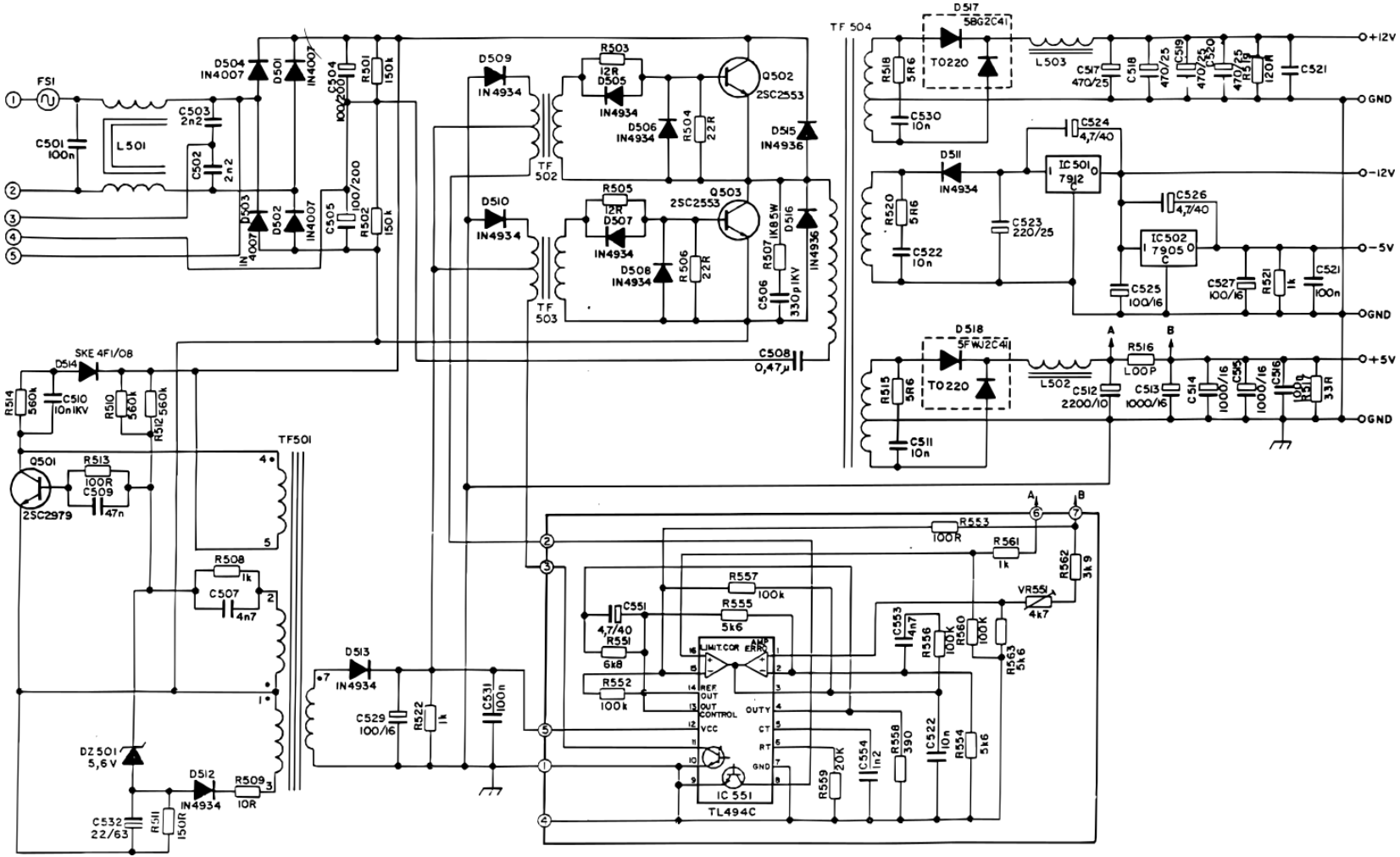
FS1
L501
C501 100n
C503 2n2
C502 2n2
D504 IN4007
D501 IN4007
D503 IN4007
D502 IN4007
C504 100/200
C505 100/200
R501 150k
R502 150k
D509 IN4934
D510 IN4934
TF 502
TF 503
R503 12R
D505 IN4934
D506 IN4934
R504 22R
Q502 2SC2553
D515 IN4936
R505 12R
D507 IN4934
D508 IN4934
R506 22R
Q503 2SC2553
R507 1K85W
D516 IN4936
C506 330p 1KV
C508 0,47µ
TF 504
D517 SBG2C41
TO220
L503
C517 470/25
C518 470/25
C519 470/25
C520 470/25
R519 120R
C521
R518 5R6
C530 10n
C524 4,7/40
D511 IN4934
IC501 7912
R520 5R6
C522 10n
C523 220/25
C526 4,7/40
IC502 7905
C525 100/16
C527 100/16
R521 1k
C521 100n
D518 SFWJ2C41
R515 5R6
C511 10n
L502
C512 2200/10
R516 LOOP
C513 1000/16
C514 1000/16
C515 1000/16
C516 1000/16
R517 33R
+12V
GND
-12V
-5V
GND
+5V
GND
A
B
D514 SKE 4F1/08
R514 560k
C510 10n 1KV
R510 560k
R512 560k
Q501 2SC2979
R513 100R
C509 47n
TF501
R508 1k
C507 4n7
D513 IN4934
C529 100/16
R522 1k
C531 100n
DZ501 5,6V
D512 IN4934
R509 10R
C532 22/63
R511 150R
R553 100R
R561 1k
R562 3k9
VR551 4k7
R557 100k
R555 5k6
C551 4,7/40
R551 6k8
R552 100k
C553 4n7
R556 100k
R560 100k
R563 5k6
LIMIT.COR
AMP ERR
REF OUT
OUT CONTROL
VCC
OUT Y
CT
RT
GND
IC 551
TL494C
R558 390
C522 10n
R554 5k6
R559 20K
C554 1n2

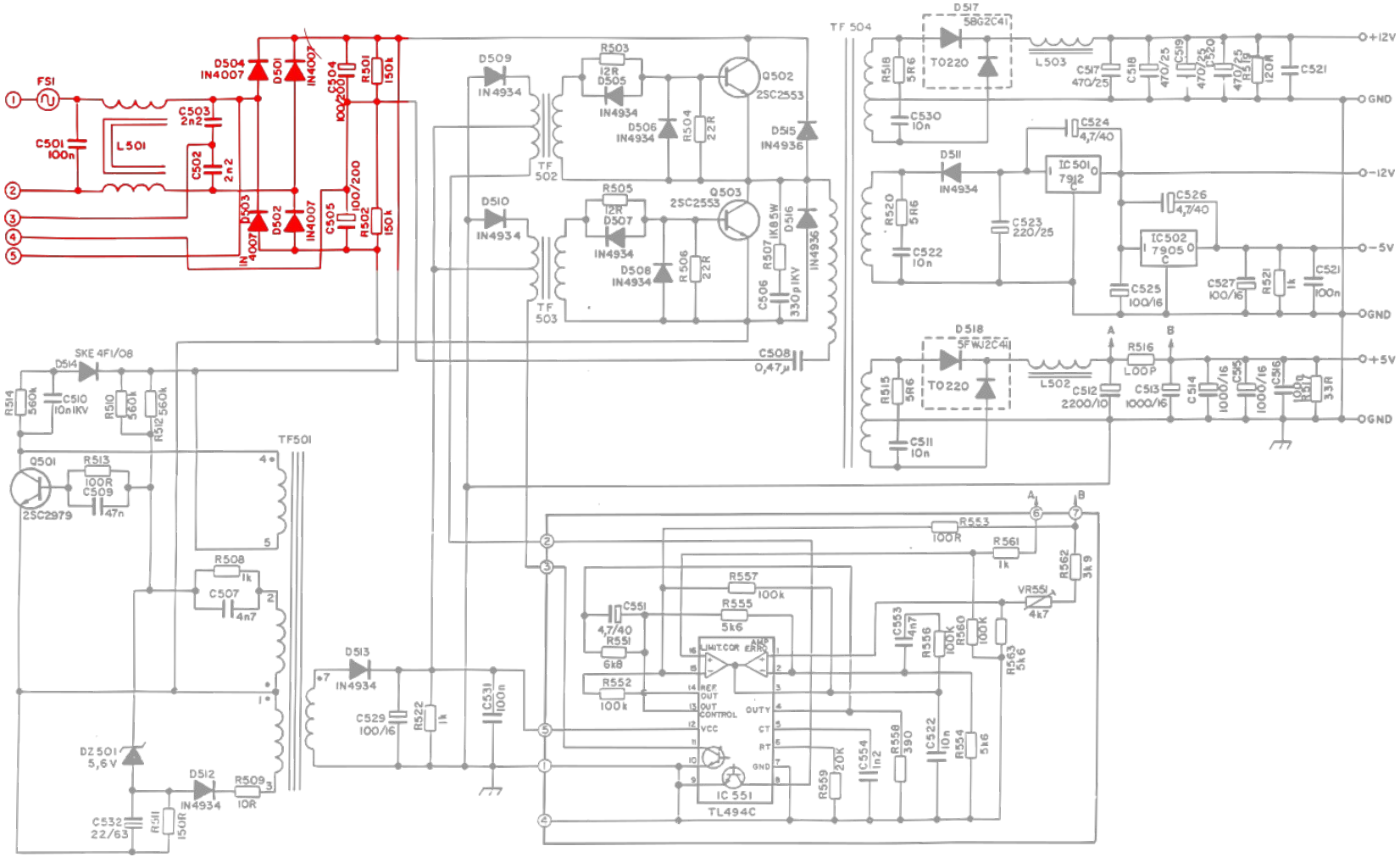
FS1
C501 100n
L501
C503 2n2
C502 2n2
D504 IN4007
D501
IN4007
D503
D502
IN4007
IN4007
C504 100/200
C505 100/200
R501 150k
R502 150k
D509
IN4934
TF 502
R503 12R
D505 IN4934
D506 IN4934
R504 22R
Q502 2SC2553
D515 IN4936
D510
IN4934
TF 503
R505 12R
D507 IN4934
D508 IN4934
R506 22R
Q503 2SC2553
R507 1K8 5W
D516 IN4936
C506 330p 1KV
C508 0,47µ
TF 504
D517 SBGZC41
TO220
R518 5R6
C530 10n
L503
C517 470/25
C518
C519 470/25
C520 470/25
R519 120R
C521
+12V
GND
C524 4,7/40
D511 IN4934
IC501 7912
R520 5R6
C522 10n
C523 220/25
C526 4,7/40
IC502 7905
C525 100/16
C527 100/16
R521 1k
C521 100n
-12V
-5V
GND
D518 SFWJ2C41
TO220
R515 5R6
C511 10n
L502
C512 2200/10
R516 LOOP
C513 1000/16
C514
C515 1000/16
C516
R517 33R
+5V
GND
A
B
D514 SKE 4F1/08
R514 560k
C510 10n 1KV
R510 560k
R512 560k
Q501 2SC2979
R513 100R
C509 47n
TF501
R508 1k
C507 4n7
D513 IN4934
C529 100/16
R522 1k
C531 100n
DZ501 5,6V
D512 IN4934
R509 10R
C532 22/63
R511 150R
R553 100R
R561 1k
R562 3k9
VR551 4k7
R557 100k
R555 5k6
C551 4,7/40
R551 6k8
R552 100k
C553 4n7
R556 100k
R560 100k
R563 5k6
LIMIT.COR
AMP ERR
REF OUT
OUT CONTROL
VCC
OUTY
CT
RT
GND
IC 551
TL494C
R559 20K
C554 1n2
R558 390
C522 10n
R554 5k6

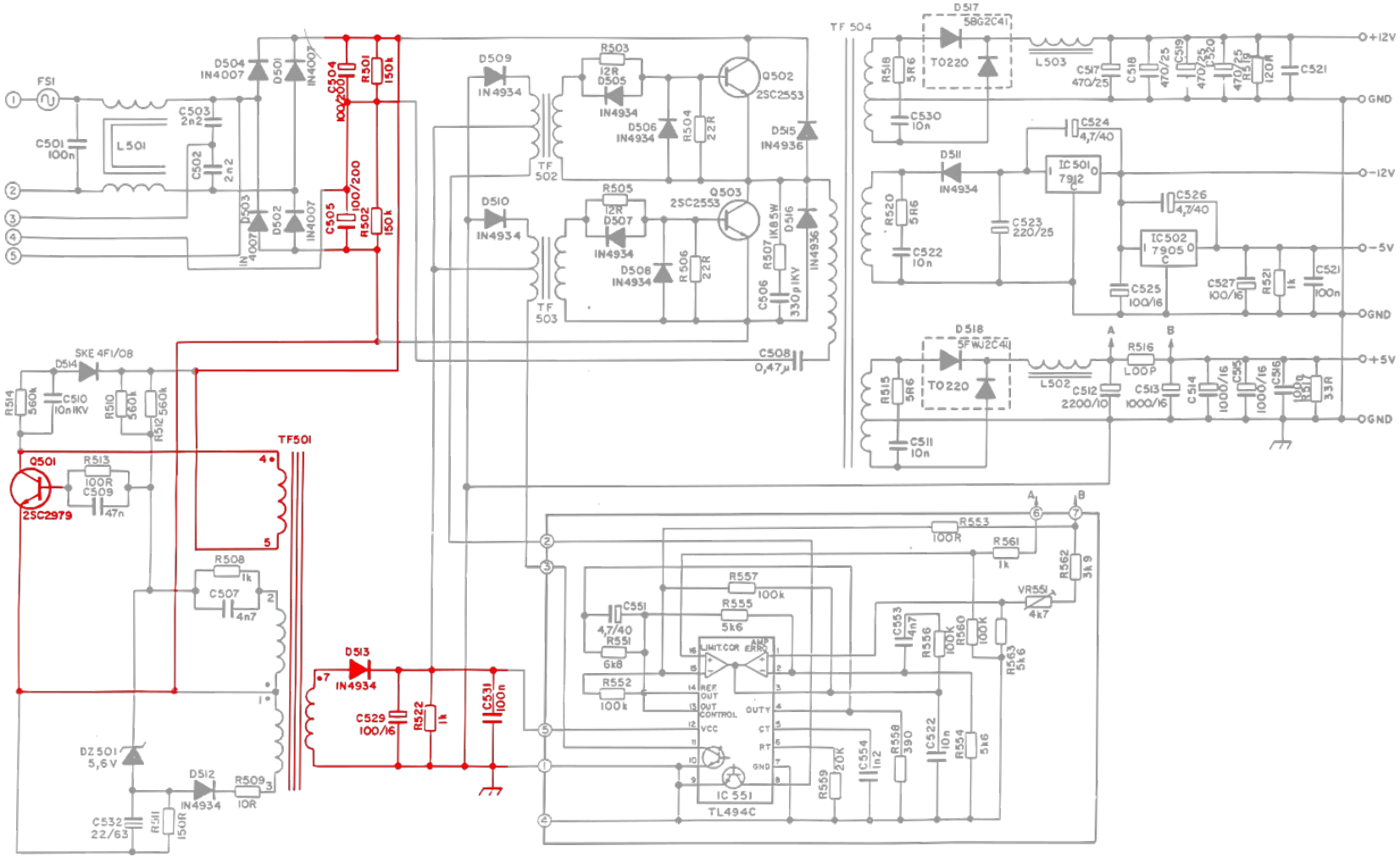
FS1
L501
C501 100n
C503 2n2
C502 2n2
D504 IN4007
D501
D503
D502
IN4007
C504 100/200
C505 100/200
R501 150k
R502 150k
D509 IN4934
D510 IN4934
TF 502
TF 503
R503 12R
D505 IN4934
D506 IN4934
R504 22R
Q502 2SC2553
D515 IN4936
R505 12R
D507 IN4934
D508 IN4934
R506 22R
Q503 2SC2553
R507 1K8 5W
D516 IN4936
C506 330p 1KV
C508 0,47µ
TF 504
D517 SBGZC41
TO220
R518 5R6
C530 10n
L503
C517 470/25
C518
C519 470/25
C520 470/25
R519 120R
C521
+12V
GND
D511 IN4934
C524 4,7/40
IC501 7912
R520 5R6
C522 10n
C523 220/25
C526 4,7/40
IC502 7905
C525 100/16
C527 100/16
R521 1k
C521 100n
-12V
-5V
GND
D518 SFWJ2C41
TO220
R515 5R6
C511 10n
L502
C512 2200/10
R516 LOOP
C513 1000/16
C514
C515 1000/16
C516
R517 33R
+5V
GND
SKE 4F1/08
D514
R514 560k
C510 10n 1KV
R510 560k
R512 560k
Q501 2SC2979
R513 100R
C509 47n
TF501
R508 1k
C507 4n7
D513 IN4934
C529 100/16
R522 1k
C531 100n
DZ501 5,6V
D512 IN4934
R509 10R
C532 22/63
R511 150R
R553 100R
R561 1k
R562 3k9
VR551 4k7
R557 100k
R555 5k6
C551 4,7/40
R551 6k8
R552 100k
C553 4n7
R556 100k
R560 100k
R563 5k6
LIMIT.COR
AMP ERR
REF OUT
OUT CONTROL
VCC
OUTY
CT
RT
GND
IC 551
TL494C
R558 390
C522 10n
R554 5k6
R559 20K
C554 1n2
A
B

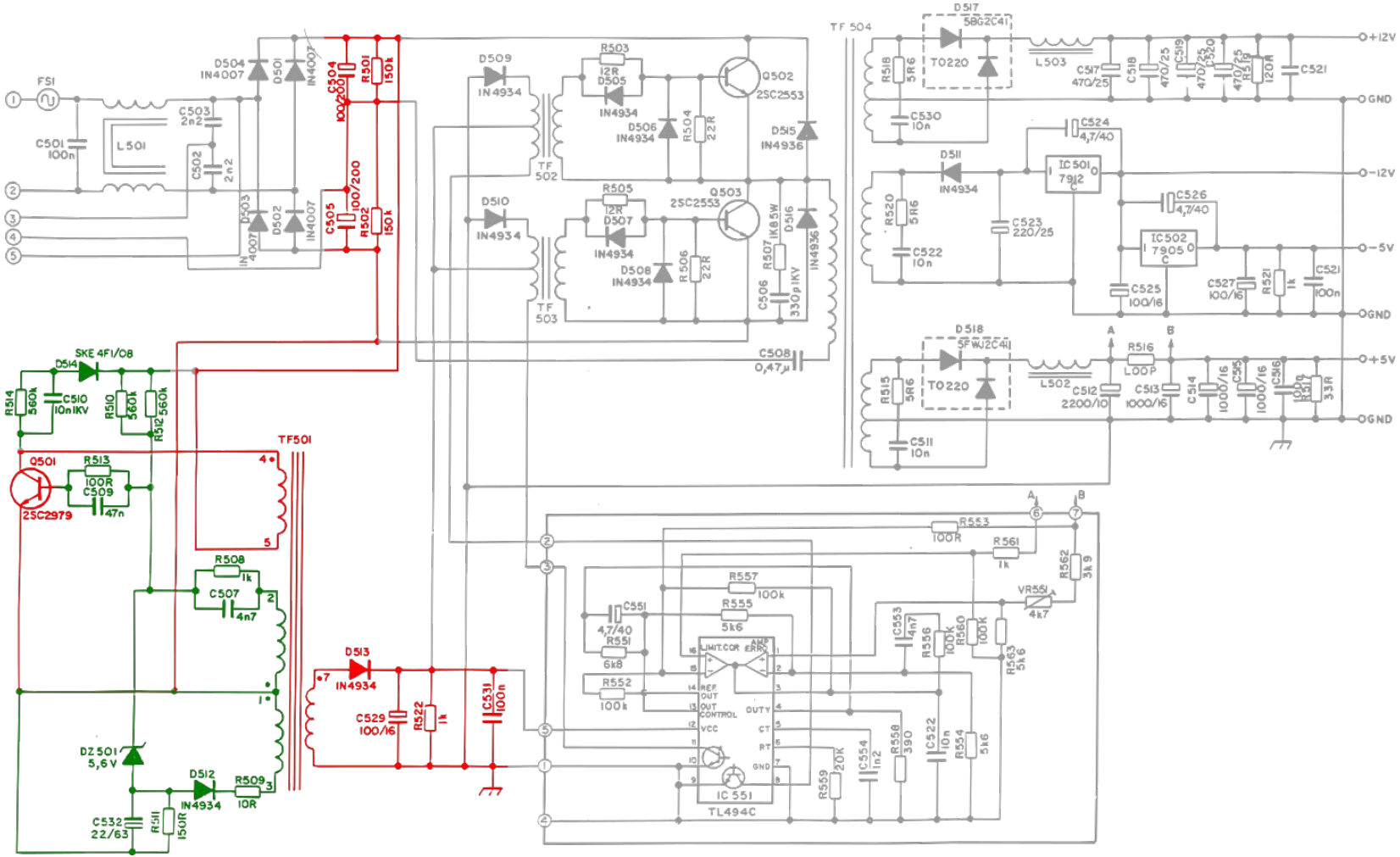
FS1
L501
C501 100n
C503 2n2
C502 2n2
D504 IN4007
D501
D503
D502
IN4007
C504 100/200
C505 100/200
R501 150k
R502 150k
D509 IN4934
D510 IN4934
TF 502
TF 503
R503 12R
D505 IN4934
D506 IN4934
R504 22R
Q502 2SC2553
D515 IN4936
R505 12R
D507 IN4934
D508 IN4934
R506 22R
Q503 2SC2553
R507 1K8 5W
D516 IN4936
C506 330p 1KV
C508 0,47µ
TF 504
D517 SBGZC41
TO220
R518 5R6
C530 10n
L503
C517 470/25
C518
C519 470/25
C520 470/25
R519 120R
C521
+12V
GND
C524 4,7/40
D511 IN4934
IC501 7912
R520 5R6
C522 10n
C523 220/25
C526 4,7/40
IC502 7905
C525 100/16
C527 100/16
R521 1k
C521 100n
-12V
-5V
GND
D518 SFWJ2C41
R515 5R6
C511 10n
L502
C512 2200/10
R516 LOOP
C513 1000/16
C514
C515 1000/16
C516 1000/16
R517 33R
+5V
GND
A
B
SKE 4F1/08
D514
R514 560k
C510 10n 1KV
R510 560k
R512 560k
Q501 2SC2979
R513 100R
C509 47n
TF501
R508 1k
C507 4n7
D513 IN4934
C529 100/16
R522 1k
C531 100n
DZ501 5,6V
D512 IN4934
R509 10R
C532 22/63
R511 150R
R553 100R
R561 1k
R562 3k9
VR551 4k7
R557 100k
R555 5k6
C551 4,7/40
R551 6k8
R552 100k
C553 4n7
R556 100k
R560 100k
R563 5k6
LIMIT.COR
AMP ERR
REF OUT
OUT CONTROL
VCC
OUTY
CT
RT
GND
IC 551
TL494C
R559 20K
C554 1n2
R558 390
C522 10n
R554 5k6

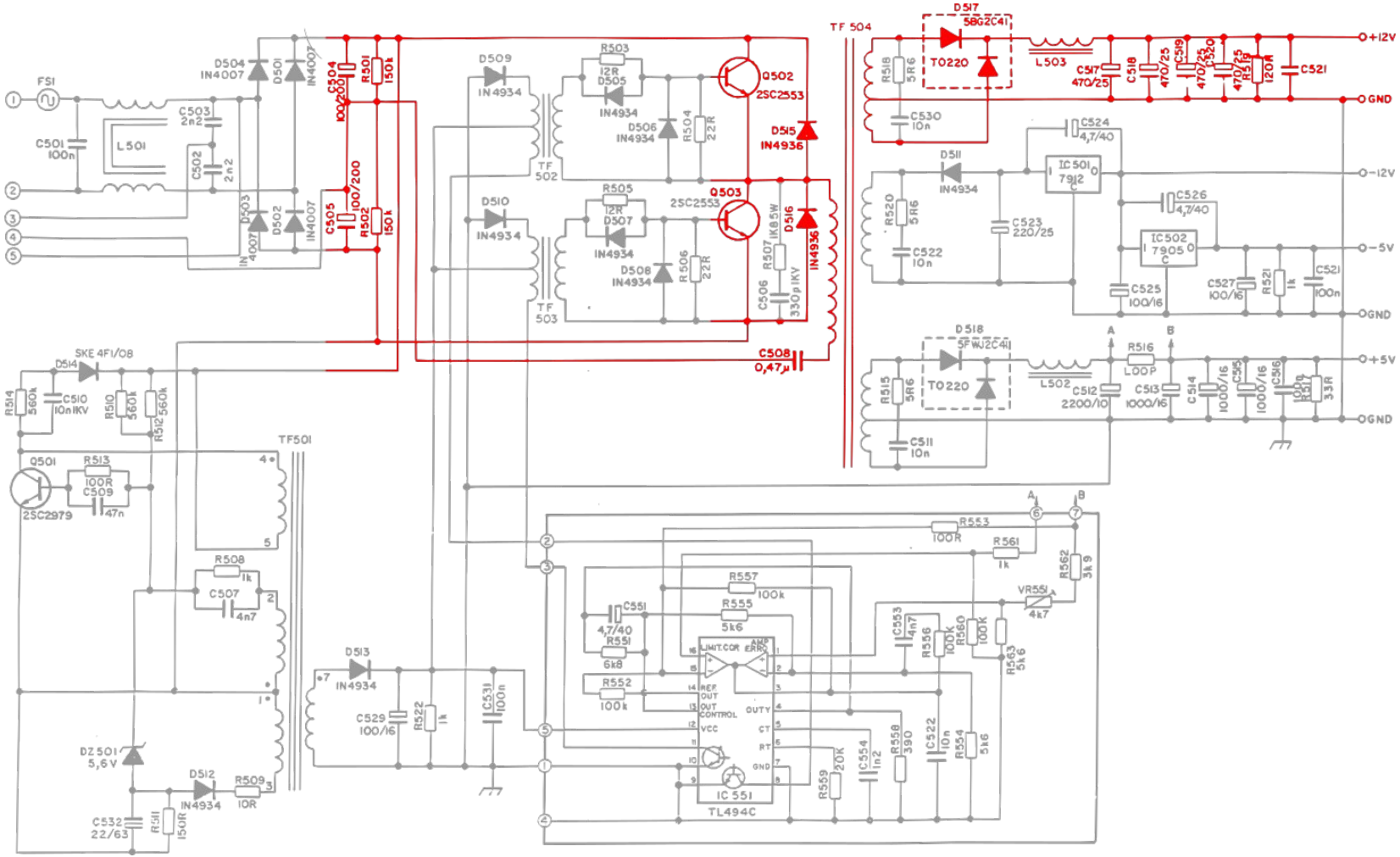
FS1
L501
C501 100n
C503 2n2
C502 2n2
D504 IN4007
D501
D503
D502
IN4007
C504 100/200
C505 100/200
R501 150k
R502 150k
D509 IN4934
D510 IN4934
TF 502
TF 503
R503 12R
D505 IN4934
D506 IN4934
R504 22R
R505 12R
D507 IN4934
D508 IN4934
R506 22R
Q502 2SC2553
Q503 2SC2553
D515 IN4936
D516 IN4936
R507 1K8 5W
C506 330p 1KV
C508 0,47µ
TF 504
D517 SBGZC41
TO220
R518 5R6
C530 10n
L503
C517 470/25
C518
C519 470/25
C520 470/25
C521
R519 120R
+12V
GND
D511 IN4934
R520 5R6
C522 10n
C523 220/25
C524 4,7/40
IC501 7912
C526 4,7/40
IC502 7905
C525 100/16
C527 100/16
R521 1k
C521 100n
-12V
-5V
GND
D518 SFWJ2C41
R515 5R6
C511 10n
L502
C512 2200/10
R516 LOOP
C513 1000/16
C514
C515 1000/16
C516 1000/16
R517 33R
+5V
GND
D514 SKE 4F1/08
R514 560k
C510 10n 1KV
R510 560k
R512 560k
Q501 2SC2979
R513 100R
C509 47n
TF501
R508 1k
C507 4n7
D513 IN4934
C529 100/16
R522 1k
C531 100n
DZ501 5,6V
D512 IN4934
R509 10R
C532 22/63
R511 150R
R553 100R
R561 1k
R562 3k9
VR551 4k7
R557 100k
R555 5k6
C551 4,7/40
R551 6k8
R552 100k
C553 4n7
R556 100k
R560 100k
R563 5k6
LIMIT.COR
AMP ERR
REF OUT
OUT CONTROL
VCC
OUTY
CT
RT
GND
IC 551
TL494C
R558 390
C522 10n
R554 5k6
R559 20K
C554 1n2

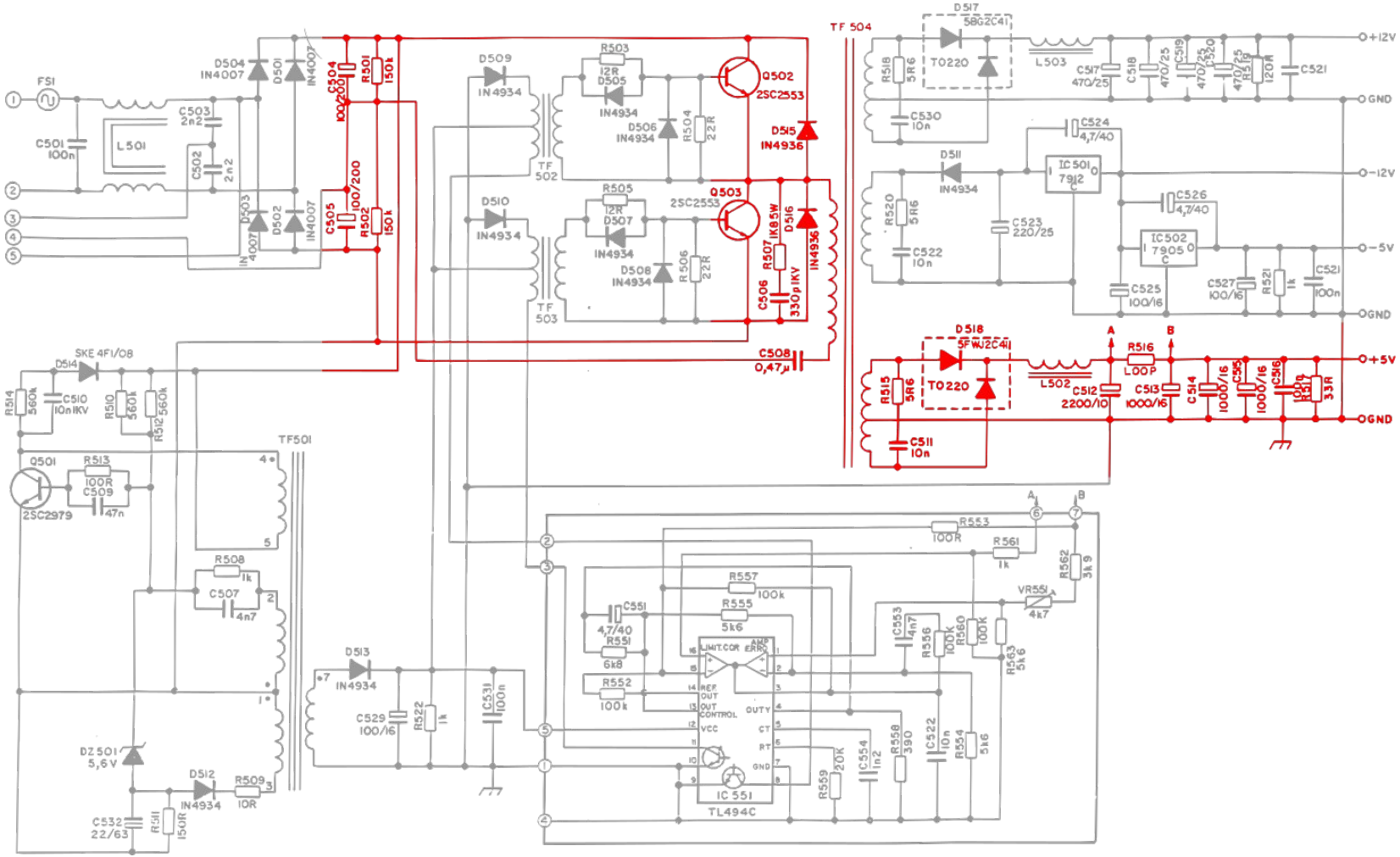
FS1
L501
C501 100n
C503 2n2
C502 2n2
D504 IN4007
D501
D503
D502
IN4007
C504 100/200
C505 100/200
R501 150k
R502 150k
D509 IN4934
D510 IN4934
TF 502
TF 503
R503 12R
D505 IN4934
D506 IN4934
R504 22R
R505 12R
D507 IN4934
D508 IN4934
R506 22R
Q502 2SC2553
Q503 2SC2553
D515 IN4936
D516 IN4936
R507 1K85W
C506 330p 1KV
C508 0,47µ
TF 504
D517 SB62C41
TO220
R518 5R6
C530 10n
L503
C517 470/25
C518
C519 470/25
C520 470/25
R519 120R
C521
+12V
GND
D511 IN4934
R520 5R6
C522 10n
C523 220/25
C524 4,7/40
IC501 7912
C526 4,7/40
IC502 7905
C525 100/16
C527 100/16
R521 1k
C521 100n
-12V
-5V
GND
D518 SFW32C41
R515 5R6
C511 10n
L502
C512 2200/10
A
B
R516 LOOP
C513 1000/16
C514
C515 1000/16
C516
R517 33R
+5V
GND
D514 SKE 4F1/08
R514 560k
C510 10n 1KV
R510 560k
R512 560k
Q501 2SC2979
R513 100R
C509 47n
TF501
R508 1k
C507 4n7
D513 IN4934
C529 100/16
R522 1k
C531 100n
DZ501 5,6V
D512 IN4934
R509 10R
C532 22/63
R511 150R
R553 100R
R561 1k
R562 3k9
VR551 4k7
R557 100k
R555 5k6
C551 4,7/40
R551 6k8
R552 100k
C553 4n7
R556 100k
R560 100k
R563 5k6
LIMIT.COR
AMP ERR
REF OUT
OUT CONTROL
VCC
OUTY
CT
RT
GND
IC 551
TL494C
R558 390
C522 10n
R554 5k6
R559 20K
C554 1n2

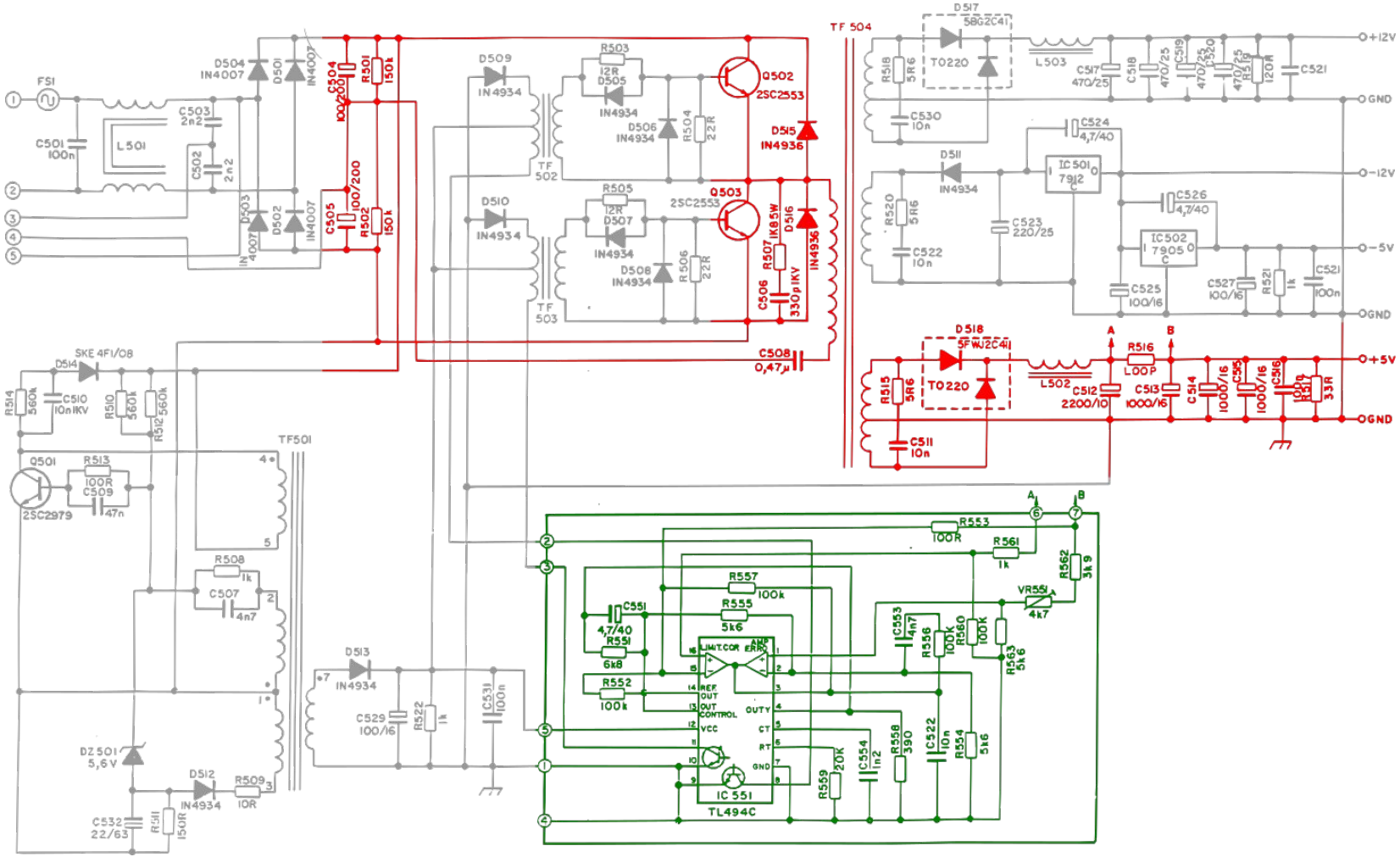
FS1
L501
C501 100n
C503 2n2
C502 2n2
D504 IN4007
D501
D503
D502
IN4007
C504 100/200
C505 100/200
R501 150k
R502 150k
D509 IN4934
D510 IN4934
TF 502
TF 503
R503 12R
D505 IN4934
D506 IN4934
R504 22R
R505 12R
D507 IN4934
D508 IN4934
R506 22R
Q502 2SC2553
Q503 2SC2553
D515 IN4936
D516 IN4936
R507 1K65W
C506 330p 1KV
C508 0,47µ
TF 504
D517 SB6ZC41
TO220
R518 5R6
C530 10n
L503
C517 470/25
C518
C519 470/25
C520 470/25
R519 120R
C521
+12V
GND
D511 IN4934
R520 5R6
C522 10n
C523 220/25
C524 4,7/40
IC501 7912
C526 4,7/40
IC502 7905
C525 100/16
C527 100/16
R521 1k
C521 100n
-12V
-5V
GND
D518 SFW12C41
R515 5R6
C511 10n
L502
C512 2200/10
A
B
R516 LOOP
C513 1000/16
C514 1000/16
C515 1000/16
C516
R517 33R
+5V
GND
D514 SKE 4F1/08
R514 560k
C510 10n 1KV
R510 560k
R512 560k
Q501 2SC2979
R513 100R
C509 47n
TF501
R508 1k
C507 4n7
D513 IN4934
C529 100/16
R522 1k
C531 100n
DZ501 5,6V
D512 IN4934
R509 10R
C532 22/63
R511 150R
R553 100R
R561 1k
R562 3k9
R557 100k
R555 5k6
C551 4,7/40
R551 6k8
R552 100k
VR551 4k7
C553 4n7
R556 100k
R560 100k
R563 5k6
LIMIT COR
AMP ERR
REF OUT
OUT CONTROL
VCC
OUT Y
CT
RT
GND
IC 551
TL494C
R559 20K
C554 1n2
R558 390
C522 10n
R554 5k6

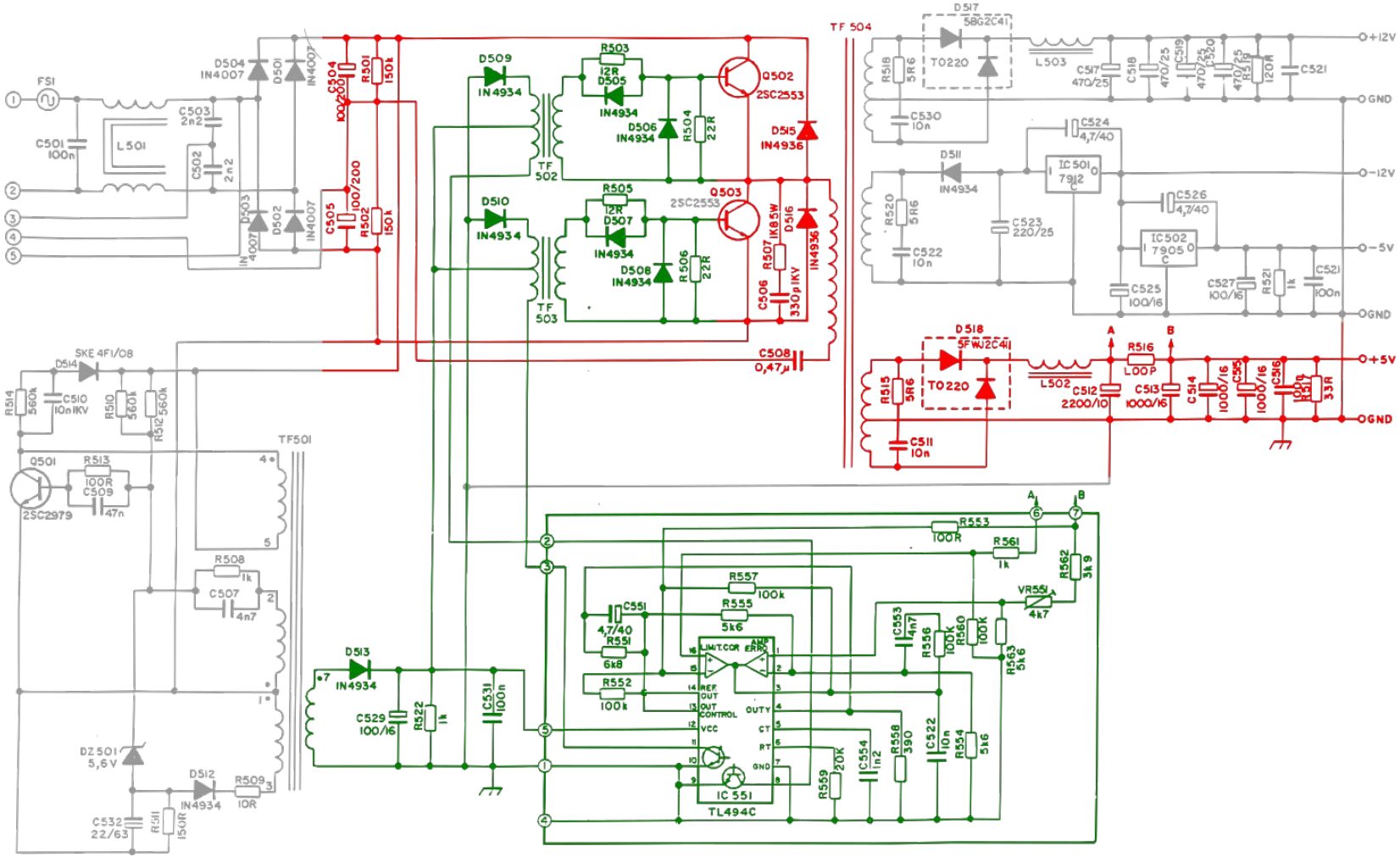
FS1
L501
C501 100n
C503 2n2
C502 2n2
D504 IN4007
D501 IN4007
D503 IN4007
D502 IN4007
C504 100/200
C505 100/200
R501 150k
R502 150k
D509 IN4934
D510 IN4934
TF 502
TF 503
R503 12R
D505 IN4934
D506 IN4934
R504 22R
R505 12R
D507 IN4934
D508 IN4934
R506 22R
Q502 2SC2553
Q503 2SC2553
D515 IN4936
D516 IN4936
R507 1K85W
C506 330p 1KV
C508 0,47µ
TF 504
D517 SB62C41
TO220
L503
C517 470/25
C518 470/25
C519 470/25
C520 470/25
R519 120R
C521
+12V
GND
R518 5R6
C530 10n
C524 4,7/40
D511 IN4934
IC501 7912
R520 5R6
C522 10n
C523 220/25
C526 4,7/40
IC502 7905
C525 100/16
C527 100/16
R521 1k
C521 100n
-12V
-5V
GND
D518 SFW32C41
TO220
L502
C512 2200/10
C511 10n
R515 5R6
A
B
R516 LOOP
C513 1000/16
C514 1000/16
C515 1000/16
C516 1000/16
R517 33R
+5V
GND
D514 SKE 4F1/08
R514 560k
C510 10n 1KV
R510 560k
R512 560k
Q501 2SC2979
R513 100R
C509 47n
TF501
R508 1k
C507 4n7
D513 IN4934
C529 100/16
R522 1k
C531 100n
DZ501 5,6V
D512 IN4934
R509 10R
C532 22/63
R511 150R
R553 100R
R561 1k
R562 3k9
VR551 4k7
R557 100k
R555 5k6
C551 4,7/40
R551 6k8
R552 100k
C553 4n7
R556 100k
R560 100k
R563 5k6
LIMIT COR
AMP ERR
REF OUT
OUT CONTROL
VCC
OUT Y
CT
RT
GND
IC 551
TL494C
R559 20K
C554 1n2
R558 390
C522 10n
R554 5k6

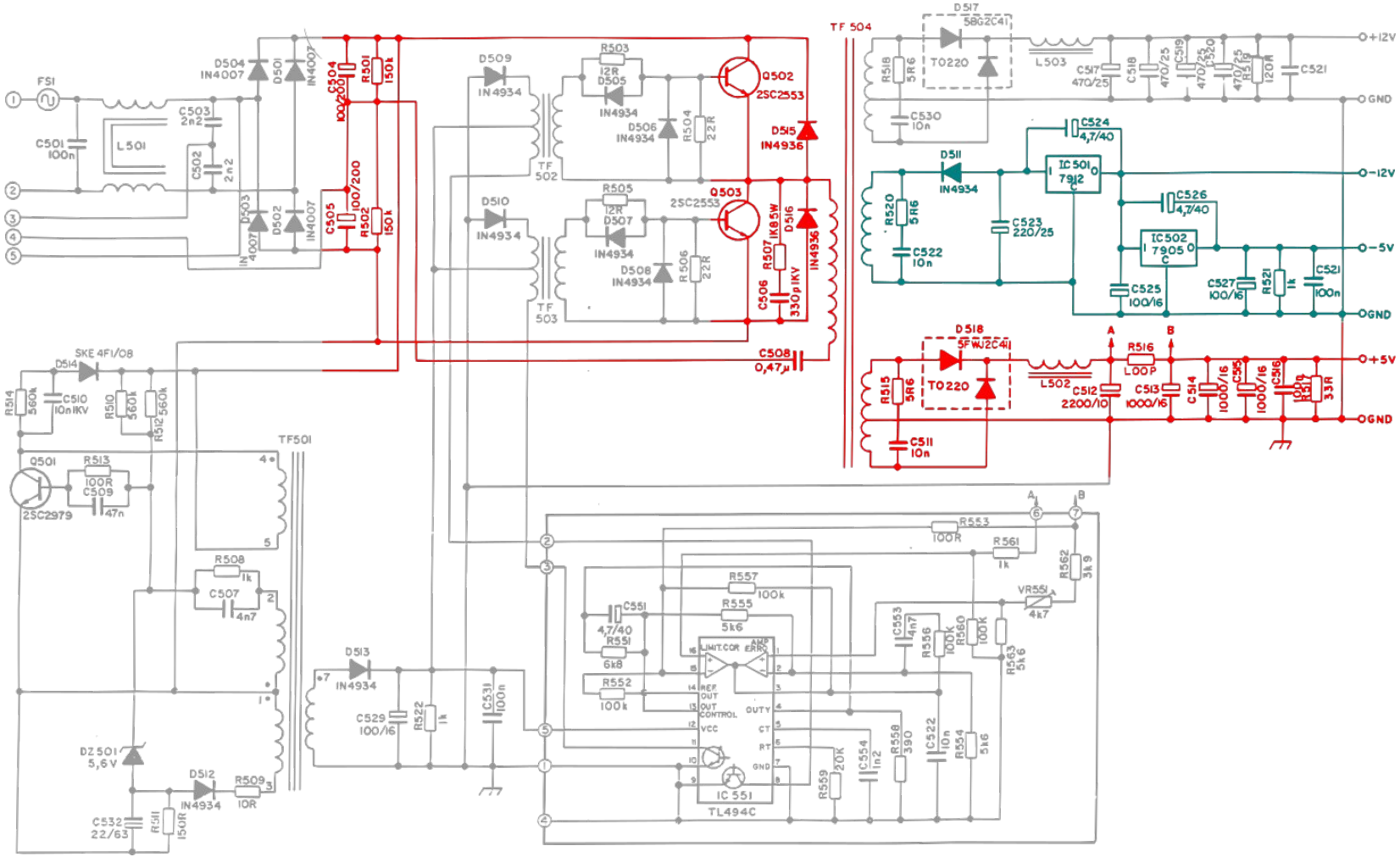
FS1
L501
C501 100n
C503 2n2
C502 2n2
D504 IN4007
D501
D502
D503
IN4007
C504 100/200
C505 100/200
R501 150k
R502 150k
D509 IN4934
D510 IN4934
TF 502
TF 503
R503 12R
D505 IN4934
D506 IN4934
R504 22R
R505 12R
D507 IN4934
D508 IN4934
R506 22R
Q502 2SC2553
Q503 2SC2553
D515 IN4936
D516 IN4936
R507 1K65W
C506 330p 1KV
C508 0,47µ
TF 504
D517 SB62C41
TO220
R518 5R6
C530 10n
L503
C517 470/25
C518
C519 470/25
C520 470/25
R519 120R
C521
+12V
GND
D511 IN4934
C524 4,7/40
IC501 7912
R520 5R6
C522 10n
C523 220/25
C526 4,7/40
IC502 7905
C525 100/16
C527 100/16
R521 1k
C521 100n
-12V
-5V
GND
D518 SFW32C41
R515 5R6
C511 10n
L502
C512 2200/10
R516 LOOP
C513 1000/16
C514 1000/16
C515 1000/16
C516
R517 33R
+5V
GND
A
B
D514 SKE 4F1/08
R514 560k
C510 10n 1KV
R510 560k
R512 560k
Q501 2SC2979
R513 100R
C509 47n
TF501
R508 1k
C507 4n7
D513 IN4934
C529 100/16
R522 1k
C531 100n
DZ501 5,6V
D512 IN4934
R509 10R
C532 22/63
R511 150R
R553 100R
R561 1k
R562 3k9
VR551 4k7
R557 100k
R555 5k6
C551 4,7/40
R551 6k8
R552 100k
C553 4n7
R556 100k
R560 100k
R563 5k6
LIMIT.COR
AMP ERR
REF OUT
OUT CONTROL
VCC
OUTY
CT
RT
GND
IC 551
TL494C
R558 390
C522 10n
R554 5k6
R559 20K
C554 1n2

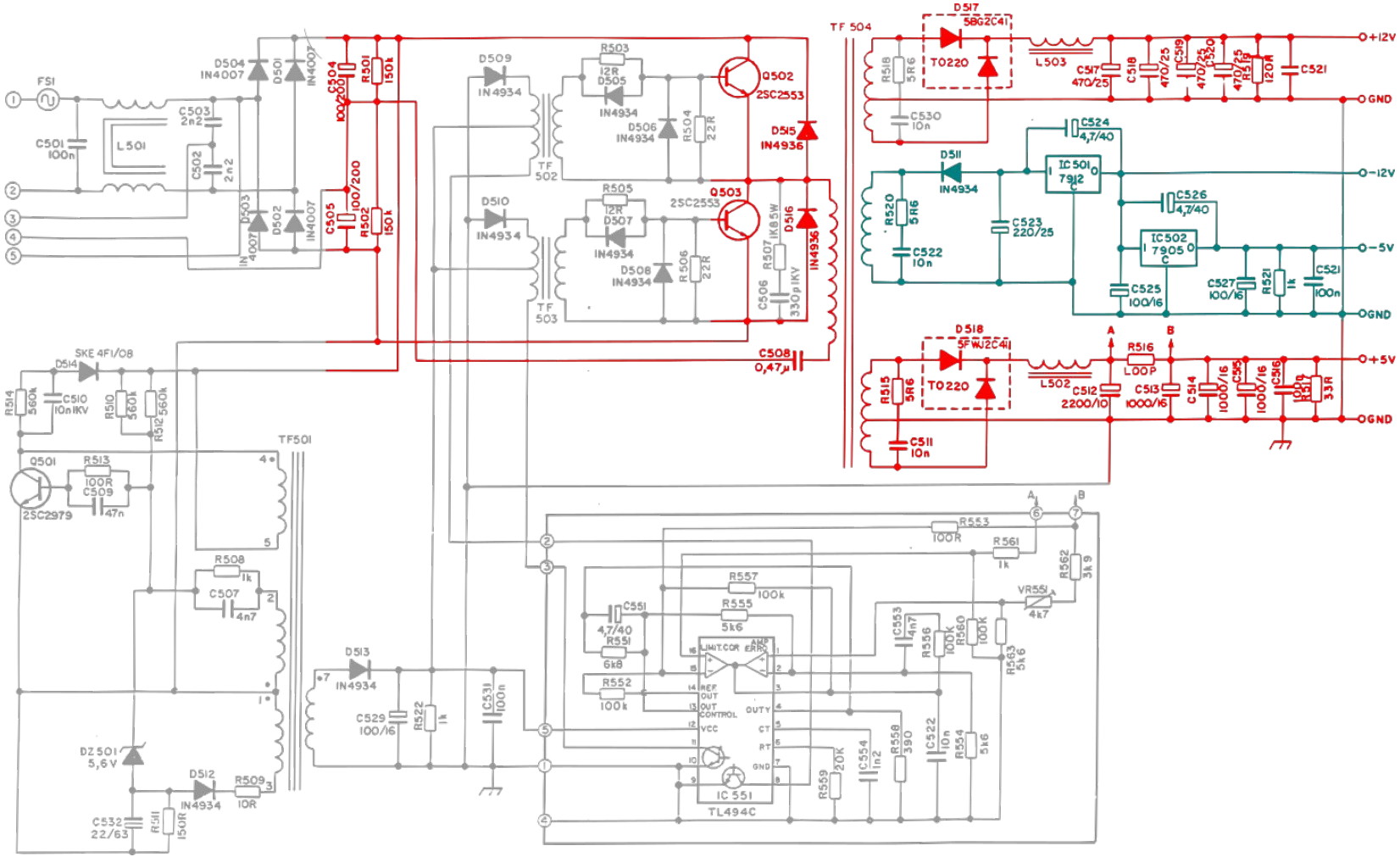
FS1
L501
C501 100n
C503 2n2
C502 2n2
D504 IN4007
D501
D503
D502
IN4007
C504 100/200
C505 100/200
R501 150k
R502 150k
D509 IN4934
D510 IN4934
TF 502
TF 503
R503 12R
D505 IN4934
D506 IN4934
R504 22R
R505 12R
D507 IN4934
D508 IN4934
R506 22R
Q502 2SC2553
Q503 2SC2553
D515 IN4936
D516 IN4936
R507 1K8 5W
C506 330p 1KV
C508 0,47µ
TF 504
D517 SBGZC41
TO220
R518 5R6
C530 10n
L503
C517 470/25
C518 470/25
C519 470/25
C520 470/25
R519 120R
C521
+12V
GND
D511 IN4934
C524 4,7/40
IC501 7912
R520 5R6
C522 10n
C523 220/25
C526 4,7/40
IC502 7905
C525 100/16
C527 100/16
R521 1k
C521 100n
-12V
-5V
GND
D518 SFWJ2C41
TO220
R515 5R6
C511 10n
L502
C512 2200/10
R516 LOOP
C513 1000/16
C514 1000/16
C515 1000/16
C516 1000/16
R517 33R
+5V
GND
A
B
D514 SKE 4F1/08
R514 560k
C510 10n 1KV
R510 560k
R512 560k
Q501 2SC2979
R513 100R
C509 47n
TF501
R508 1k
C507 4n7
D513 IN4934
C529 100/16
R522 1k
C531 100n
DZ501 5,6V
D512 IN4934
R509 10R
C532 22/63
R511 150R
R553 100R
R561 1k
R562 3k9
VR551 4k7
R557 100k
R555 5k6
C551 4,7/40
R551 6k8
R552 100k
C553 4n7
R556 100k
R560 100k
R563 5k6
LIMIT.COR
AMP ERR
REF OUT
OUT CONTROL
VCC
OUTY
CT
RT
GND
IC 551
TL494C
R559 20K
C554 1n2
R558 390
C522 10n
R554 5k6

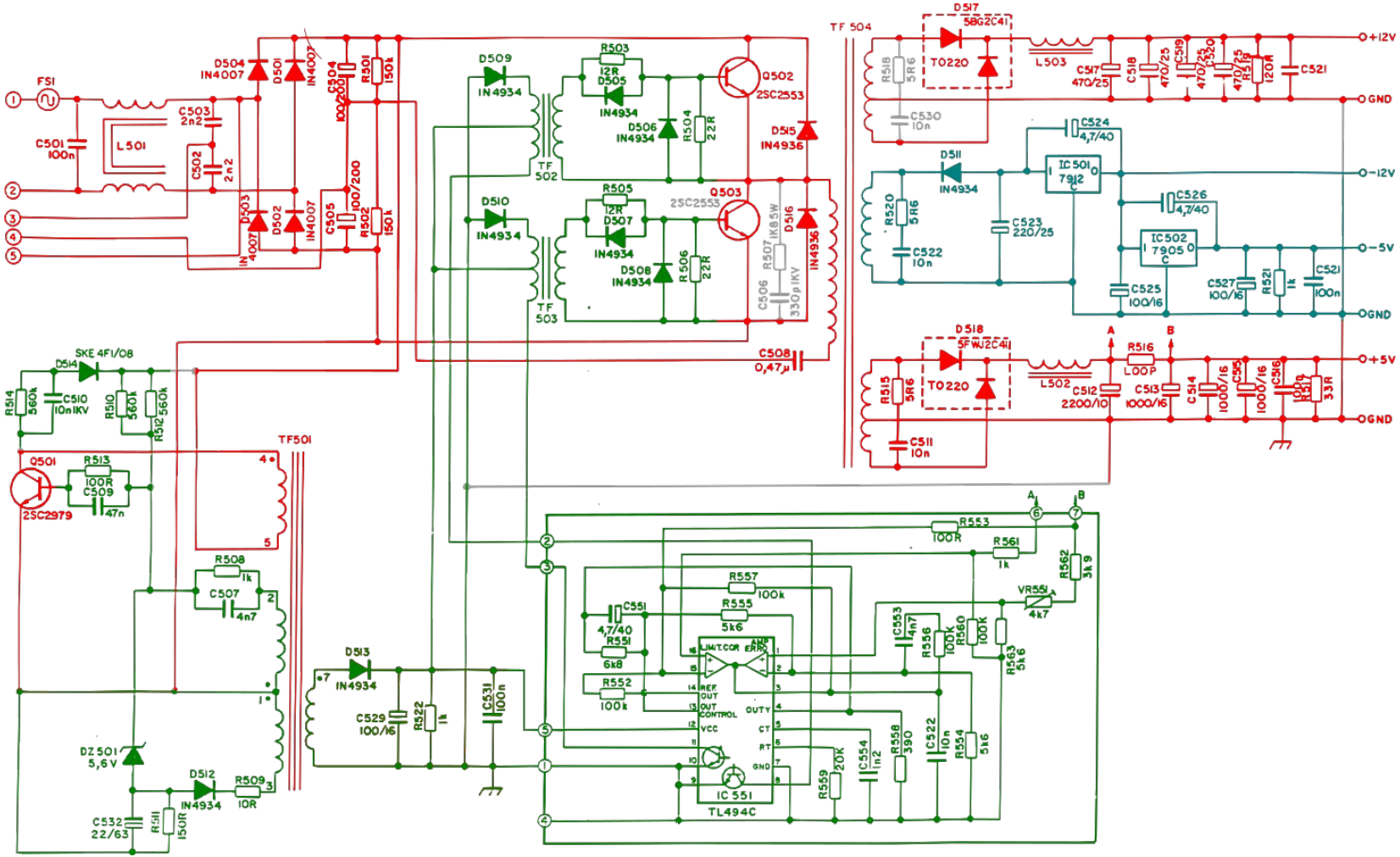
FS1
L501
C501 100n
C503 2n2
C502 2n2
D504 IN4007
D501
D503
D502
IN4007
C504 100/200
C505 100/200
R501 150k
R502 150k
D509 IN4934
D510 IN4934
TF 502
TF 503
R503 12R
D505 IN4934
D506 IN4934
R504 22R
R505 12R
D507 IN4934
D508 IN4934
R506 22R
Q502 2SC2553
Q503 2SC2553
D515 IN4936
D516 IN4936
R507 1K8 5W
C506 330p 1KV
C508 0,47µ
TF 504
D517 SB6ZC41
TO220
R518 5R6
C530 10n
L503
C517 470/25
C518
C519 470/25
C520 470/25
R519 120R
C521
+12V
GND
C524 4,7/40
D511 IN4934
IC501 7912
R520 5R6
C522 10n
C523 220/25
C526 4,7/40
IC502 7905
C525 100/16
C527 100/16
R521 1k
C521 100n
-12V
-5V
GND
D518 SFW12C41
TO220
R515 5R6
C511 10n
L502
C512 2200/10
R516 LOOP
C513 1000/16
C514
C515 1000/16
C516
R517 33R
+5V
GND
A
B
SKE 4F1/08
D514
R514 560k
C510 10n 1KV
R510 560k
R512 560k
Q501 2SC2979
R513 100R
C509 47n
TF501
R508 1k
C507 4n7
D513 IN4934
C529 100/16
R522 1k
C531 100n
DZ501 5,6V
D512 IN4934
R509 10R
C532 22/63
R511 150R
R553 100R
R561 1k
R562 3k9
VR551 4k7
R557 100k
R555 5k6
C551 4,7/40
R551 6k8
R552 100k
C553 4n7
R556 100k
R560 100k
R563 5k6
LIMIT COR
AMP ERR
REF OUT
OUT CONTROL
VCC
OUT Y
CT
RT
GND
IC 551
TL494C
R559 20K
C554 1n2
R558 390
C522 10n
R554 5k6

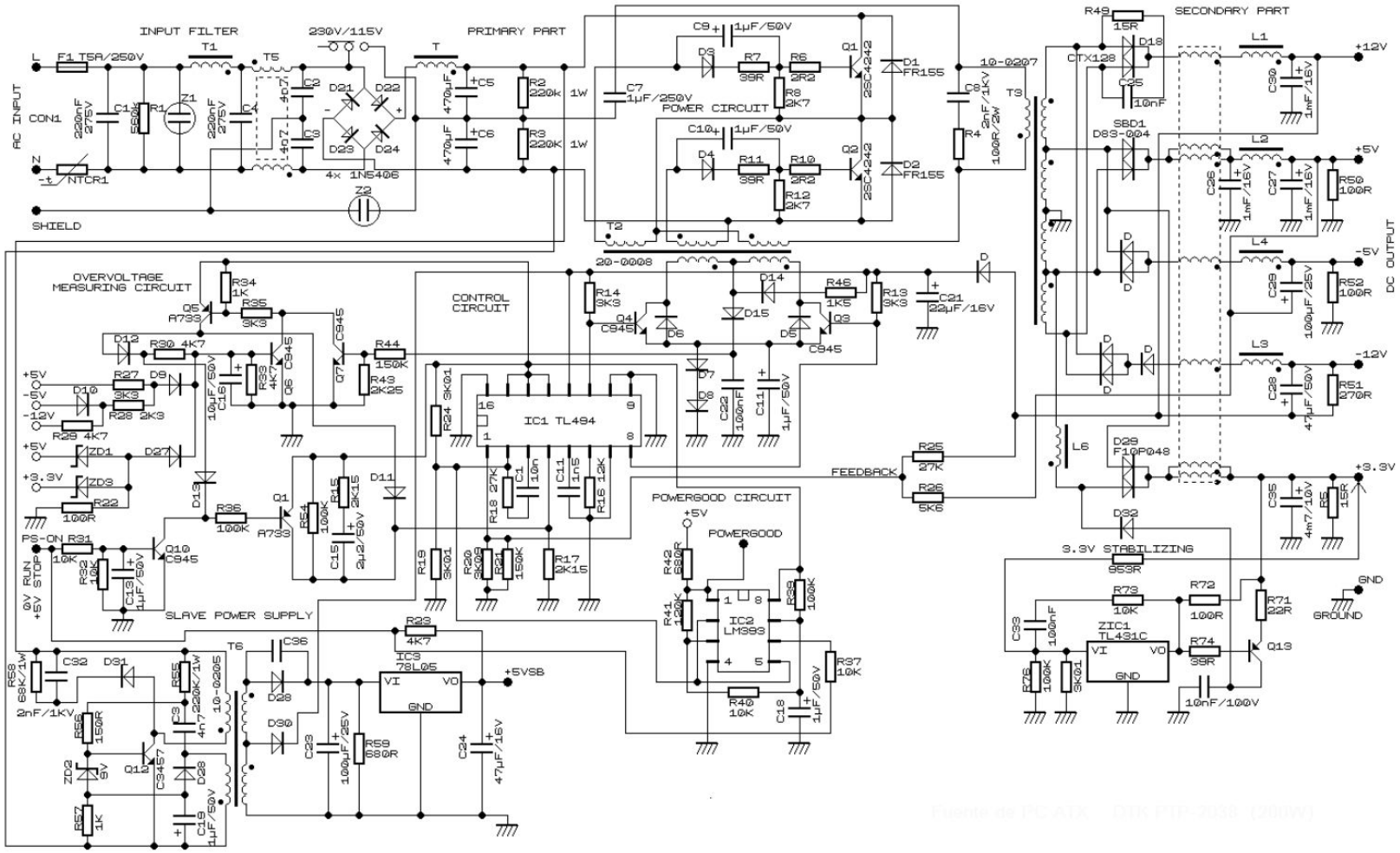


Fuente de PC ATX DTK PTP-2038 (200W)

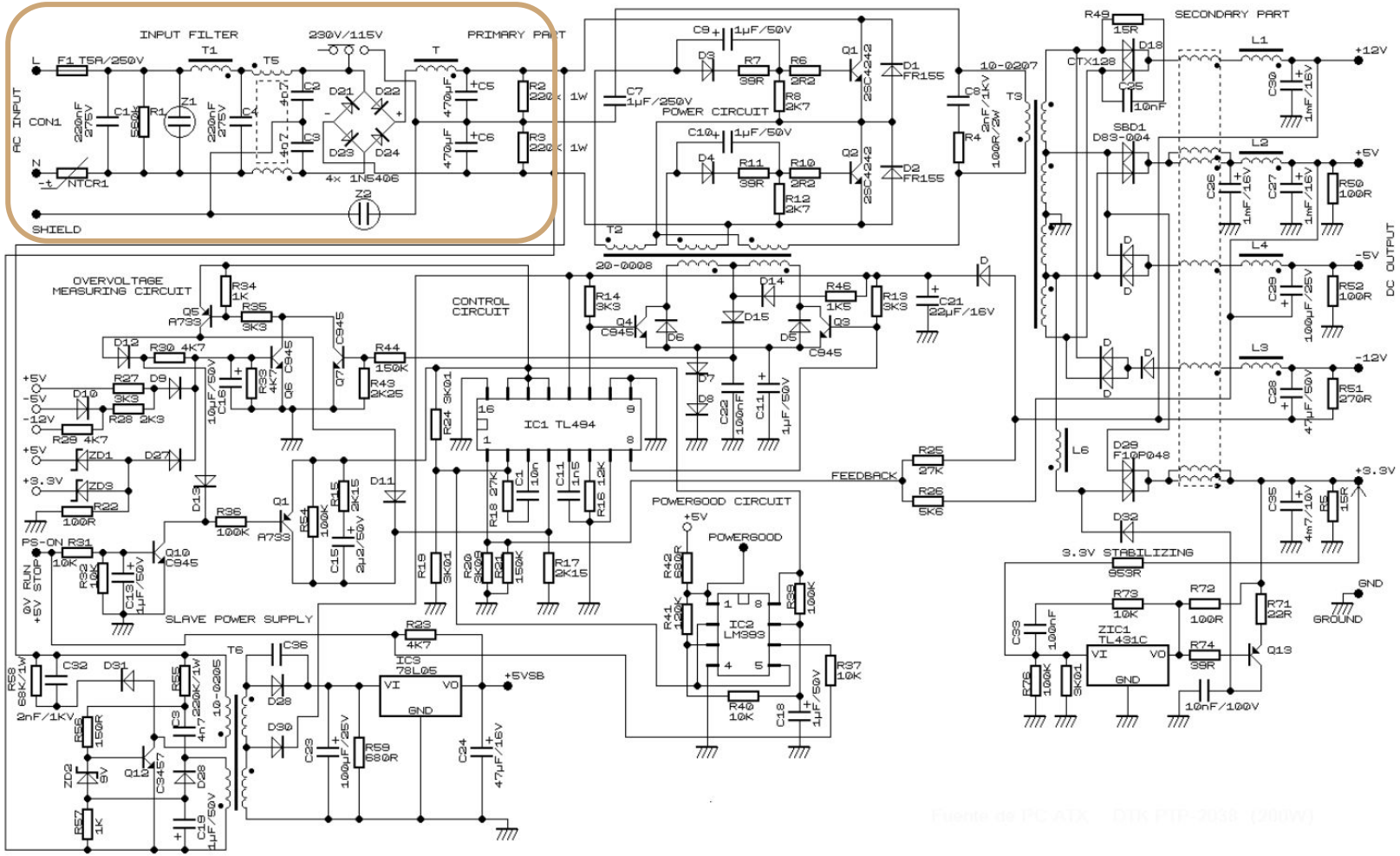


Fuente de PC ATX DTK PTP-2038 (200W)

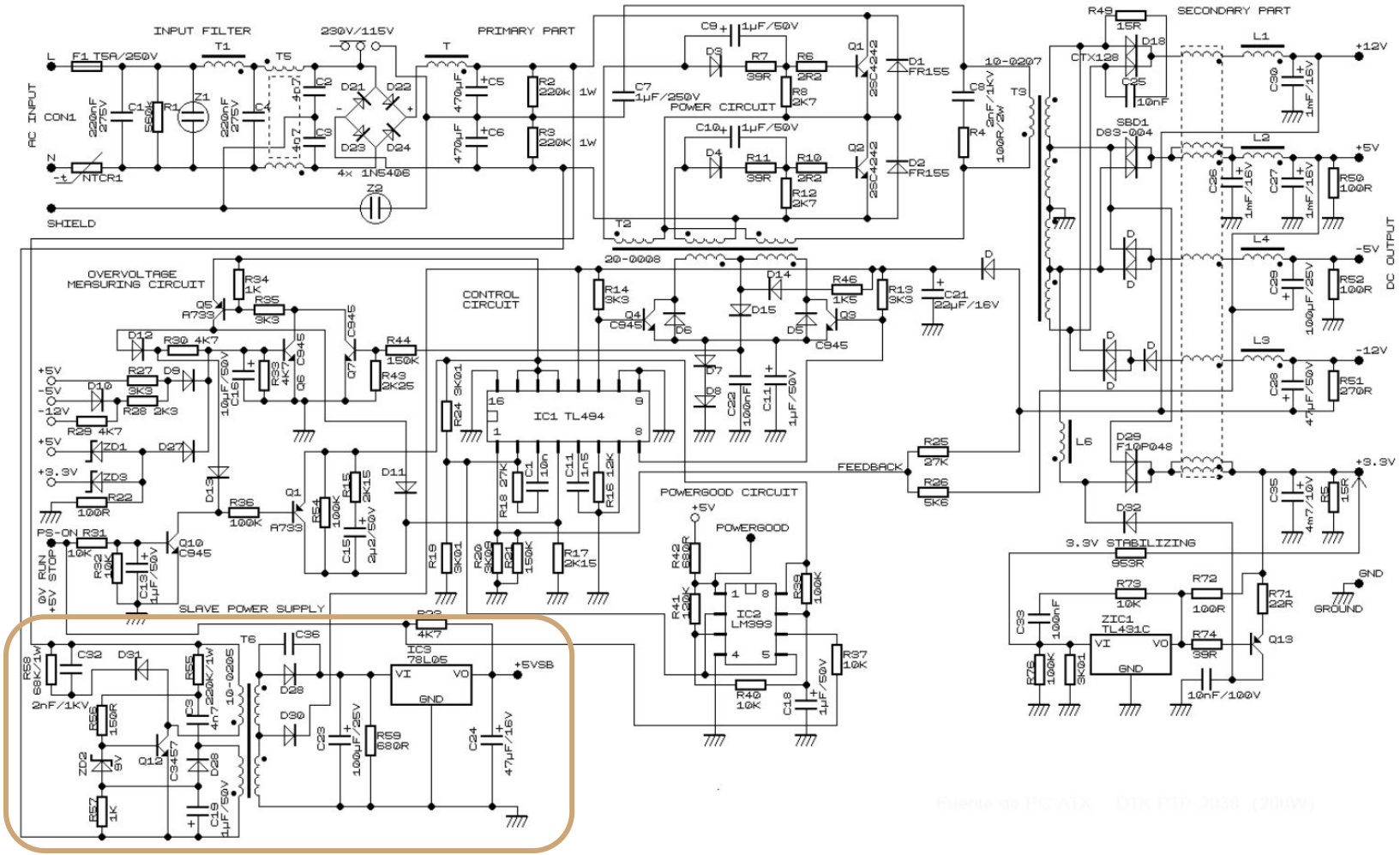


Fuente de PC ATX DTK PTP-2038 (200W)

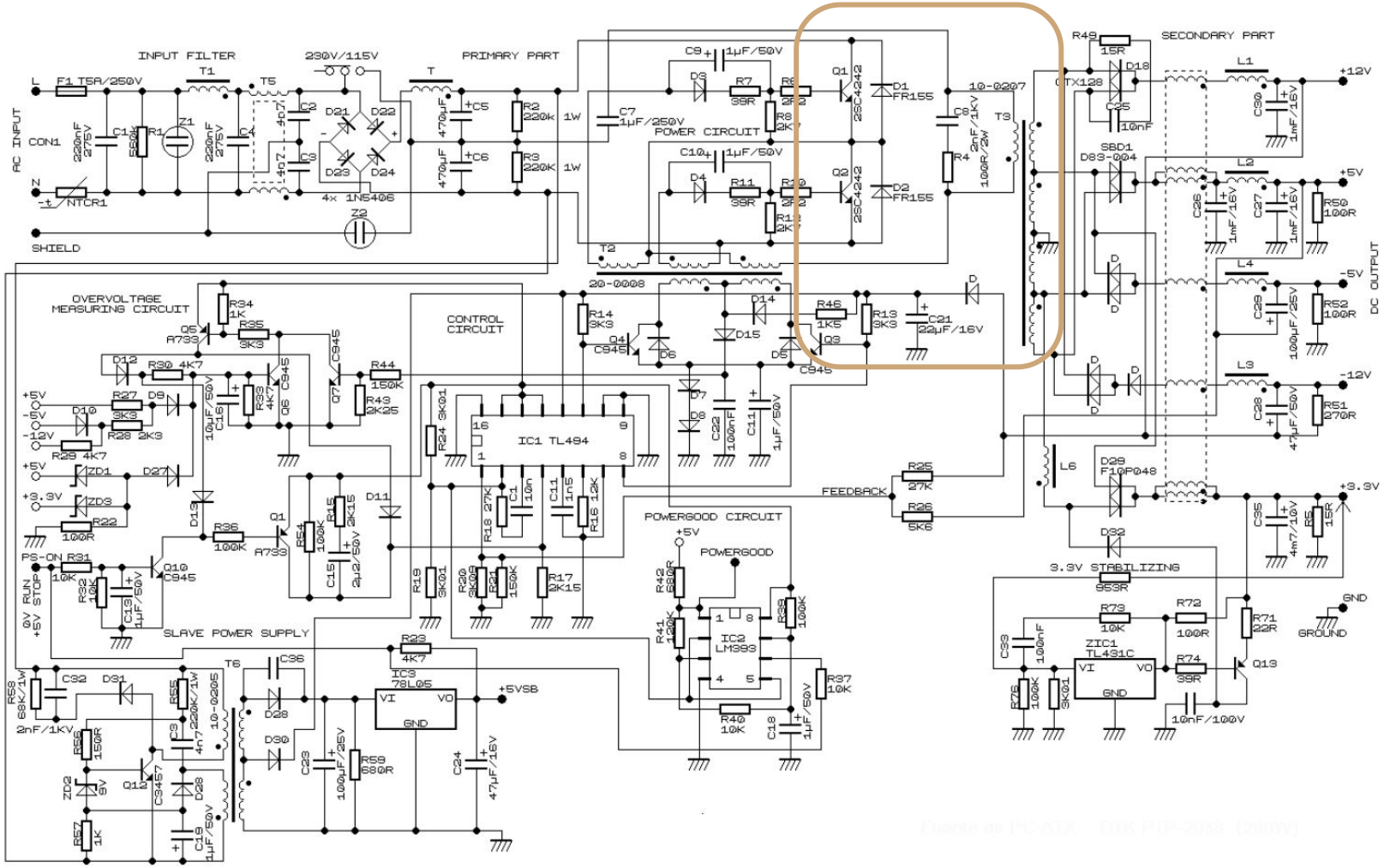


Fuente de PC ATX DTK PTP-2038 (200W)

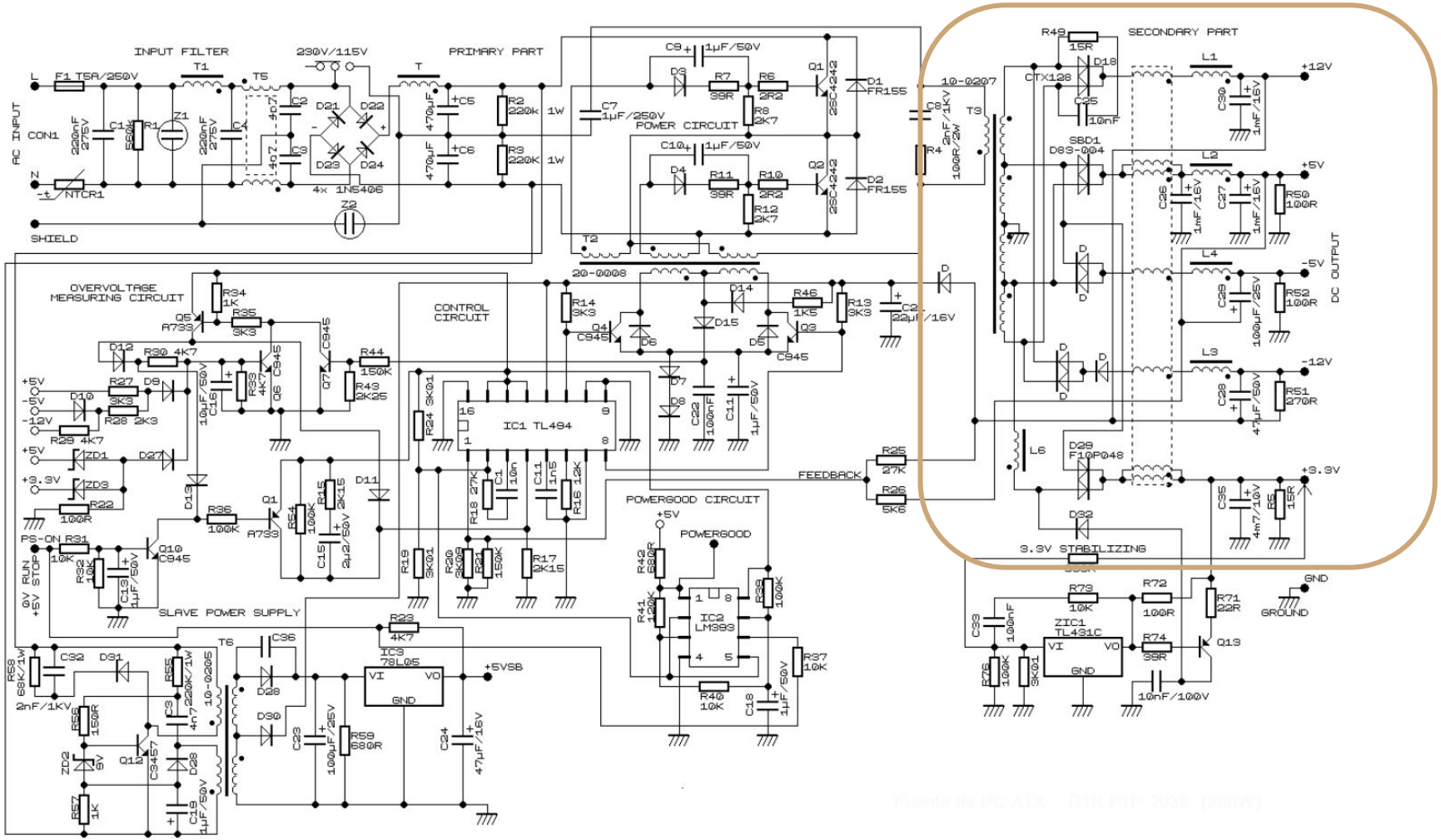


Fuente de PC ATX DTK PTP-2038 (200W)

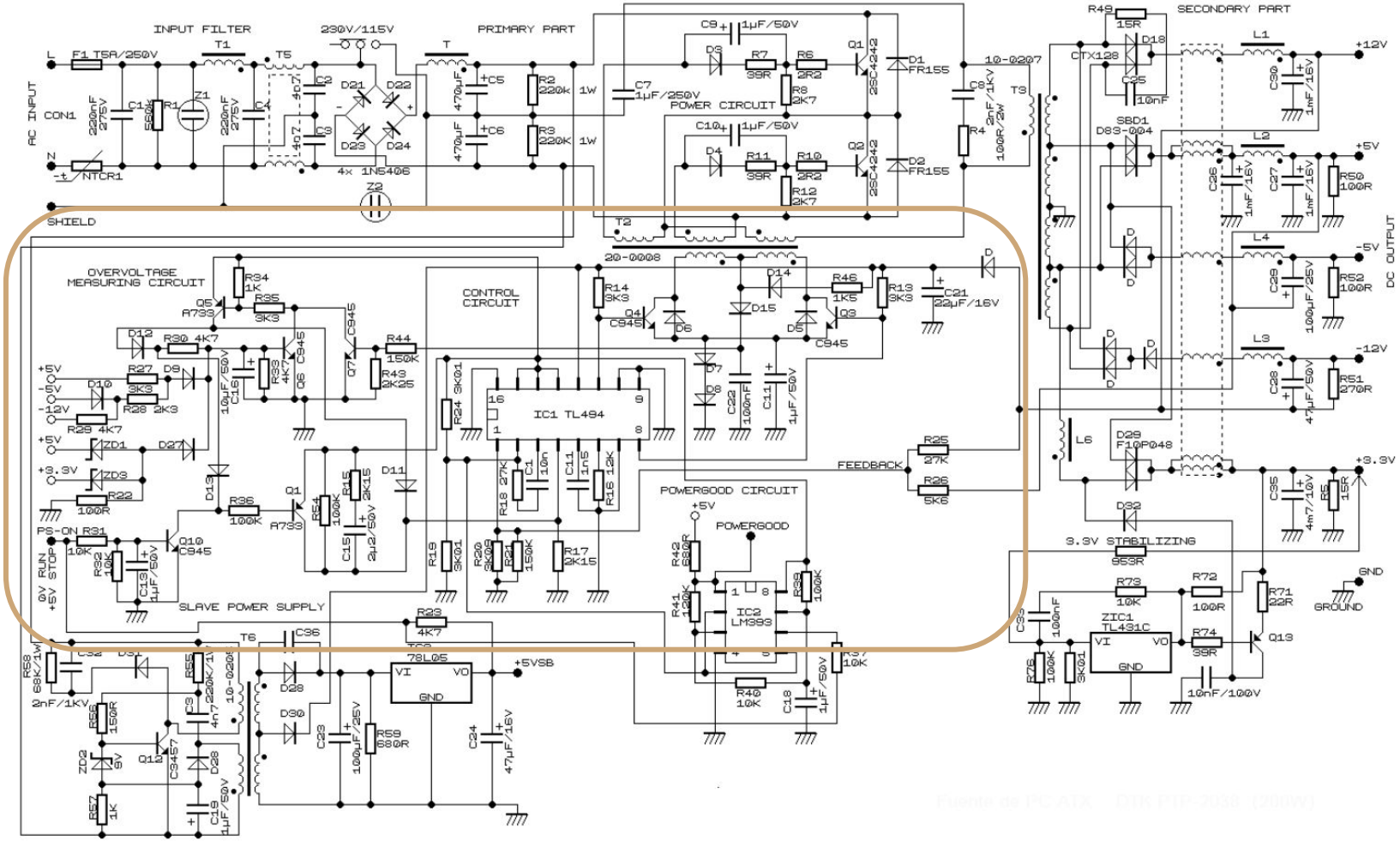


Fuente de PC ATX DTK PTP-2038 (200W)

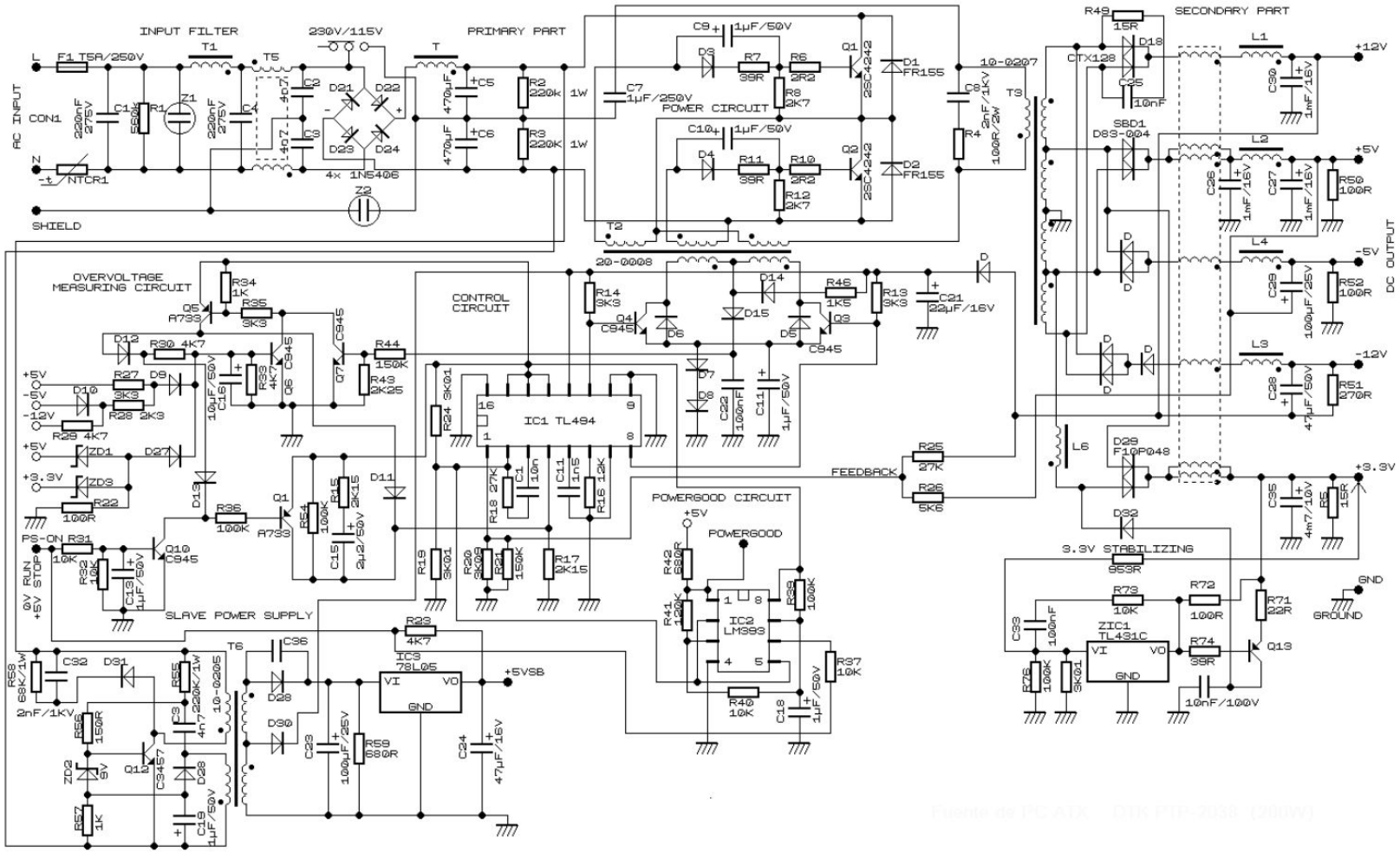


Fuente de PC ATX DTK PTP-2038 (200W)